UDEF-IT, LLC
Enabling
Global Interoperability

Mapping QLM Concepts to UDEF

Ron Schuldt, Chair
The Open Group UDEF Project

9 May 2011

Mapping Concepts to UDEF - Six Basic Steps

1. Identify the applicable UDEF property word that characterizes the dominant attribute (property) of the data element concept. For example, Name, Identifier, Date, etc.
2. Identify the dominant UDEF object word that the dominant property (selected in step 1) is describing. For example, Person_Name, Product_Identifier, Document_Date, etc.
3. By reviewing the UDEF tree for the selected property identified in step 1, identify applicable qualifiers that are necessary to unambiguously describe the property word term. For example, Family Name
4. By reviewing the UDEF tree for the selected object identified in step 2, identify applicable qualifiers that are necessary to unambiguously describe the object word term. For example, Customer Person
5. Concatenate the object term and the property term to create a UDEF naming convention compliant name where it is recognized that the name may seem artificially long. For example, Customer Person_Family Name
6. Derive a structured ID based on the UDEF taxonomy that carries the UDEF inherited indexing scheme. For example <CustomerPersonFamilyName UDEFID="as.5_11.10">

http://www.opengroup.org/udefinfo/htm/en_defs.htm

QLM Refrigerator Component Concepts

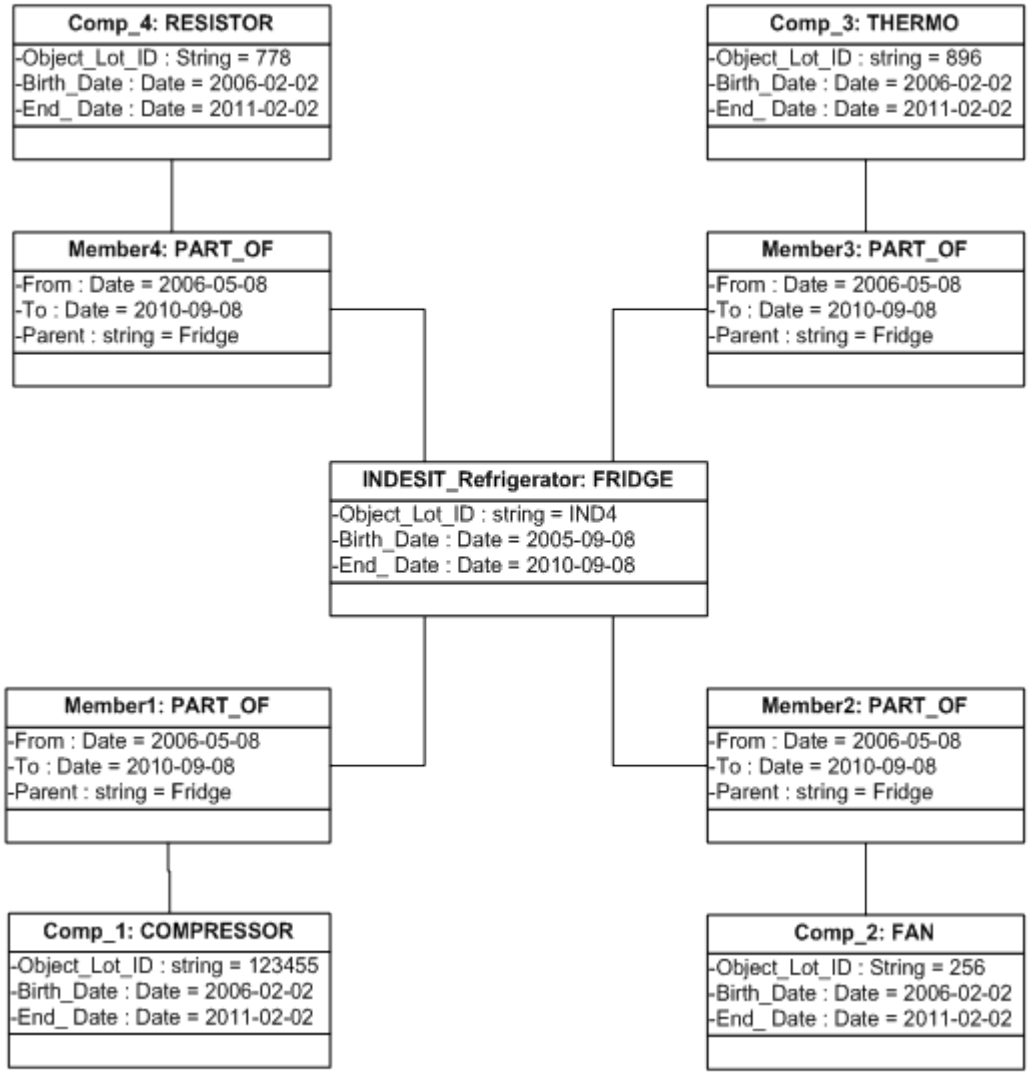

Mapping Resistor Component Concept to UDEF

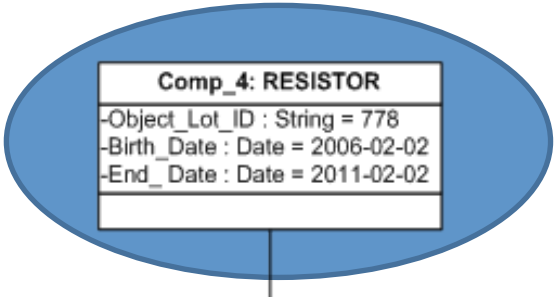

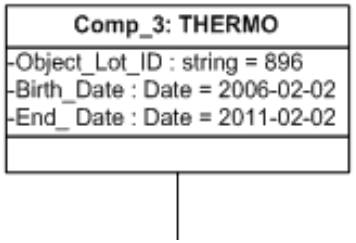

1. Identify the applicable UDEF property word that characterizes the dominant attribute (property) of the data element concept. For above example = Identifier

2. Identify the dominant UDEF object word that the dominant property (selected in step 1) is describing. For above example = Product_Identifier

3. By reviewing the UDEF tree for the selected property identified in step 1, identify applicable qualifiers that are necessary to unambiguously describe the property word term. For above example = Lot Identifier

4. By reviewing the UDEF tree for the selected object identified in step 2, identify applicable qualifiers that are necessary to unambiguously describe the object word term. For above example = Resistor Component Part Product

5. Concatenate the object term and the property term to create a UDEF naming convention compliant name where it is recognized that the name may seem artificially long. For above example = Resistor Component Part Product_Lot Identifier

6. Derive a structured ID based on the UDEF taxonomy that carries the UDEF inherited indexing scheme. For above example <ResistorComponentPartProductLotIdentifier UDEFID="a.f.g.9_34.8">

QLM to UDEF Mappings

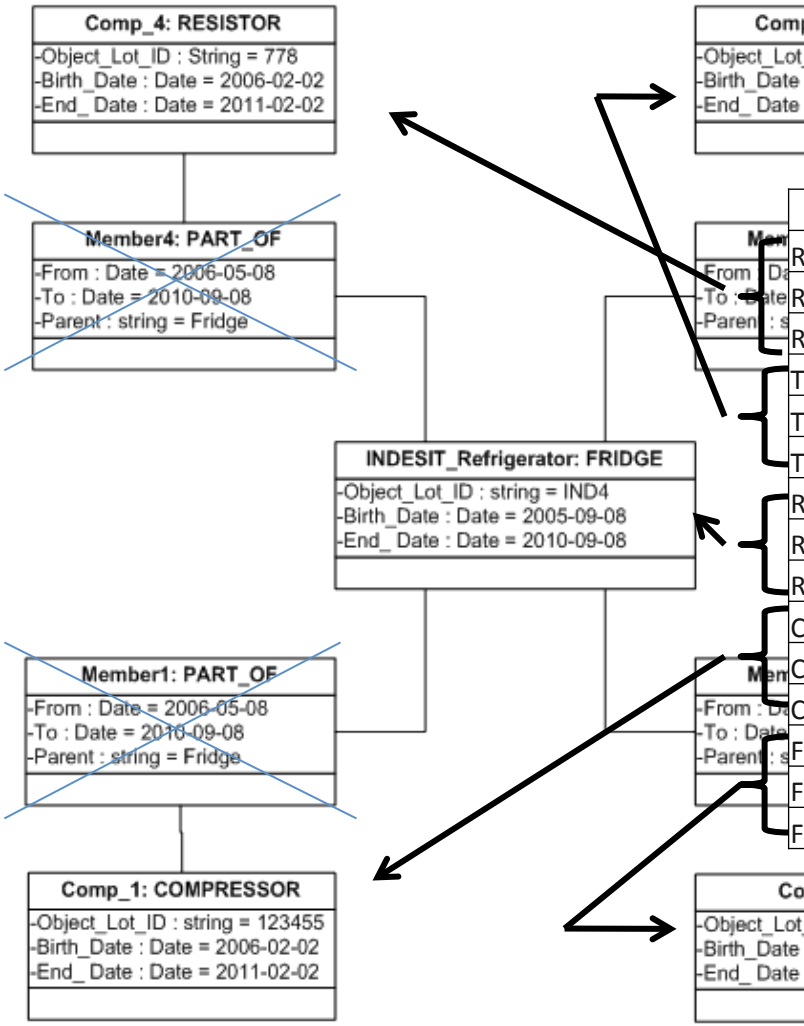

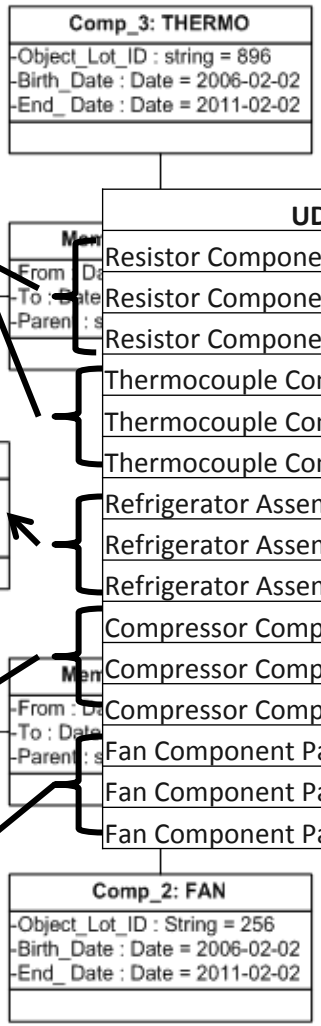

UDEF Object	UDEF Property	UDEF ID
Resistor Component Part Product	Lot Identifier	a.f.g.9_34.8
Resistor Component Part Product	Manufacture Date	a.f.g.9_15.6
Resistor Component Part Product	Usage End Date	a.f.g.9_2.56.6
Thermocouple Component Part Product	Lot Identifier	b.f.g.9_34.8
Thermocouple Component Part Product	Manufacture Date	b.f.g.9_15.6
Thermocouple Component Part Product	Usage End Date	b.f.g.9_2.56.6
Refrigerator Assembly Product	Serial Identifier	b.o.9_31.8
Refrigerator Assembly Product	Assembly Date	b.o.9_2.6
Refrigerator Assembly Product	Usage End Date	b.o.9_2.56.6
Compressor Component Part Product	Lot Identifier	c.f.g.9_34.8
Compressor Component Part Product	Manufacture Date	c.f.g.9_15.6
Compressor Component Part Product	Usage End Date	c.f.g.9_2.56.6
Fan Component Part Product	Lot Identifier	d.f.g.9_34.8
Fan Component Part Product	Manufacture Date	d.f.g.9_15.6
Fan Component Part Product	Usage End Date	d.f.g.9_2.56.6

QLM Refrigerator ID and Owner Concepts

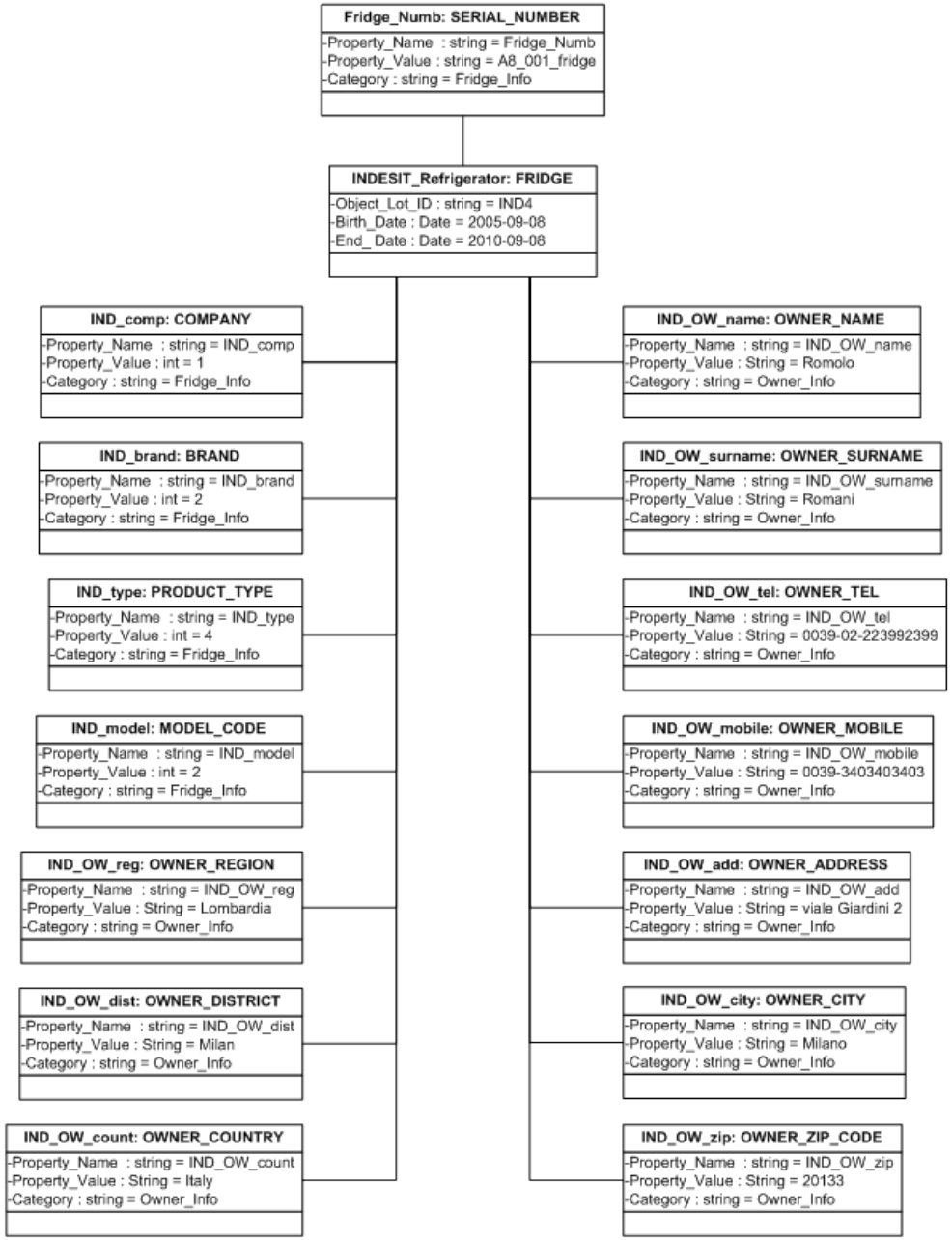

QLM to UDEF Mappings - continued

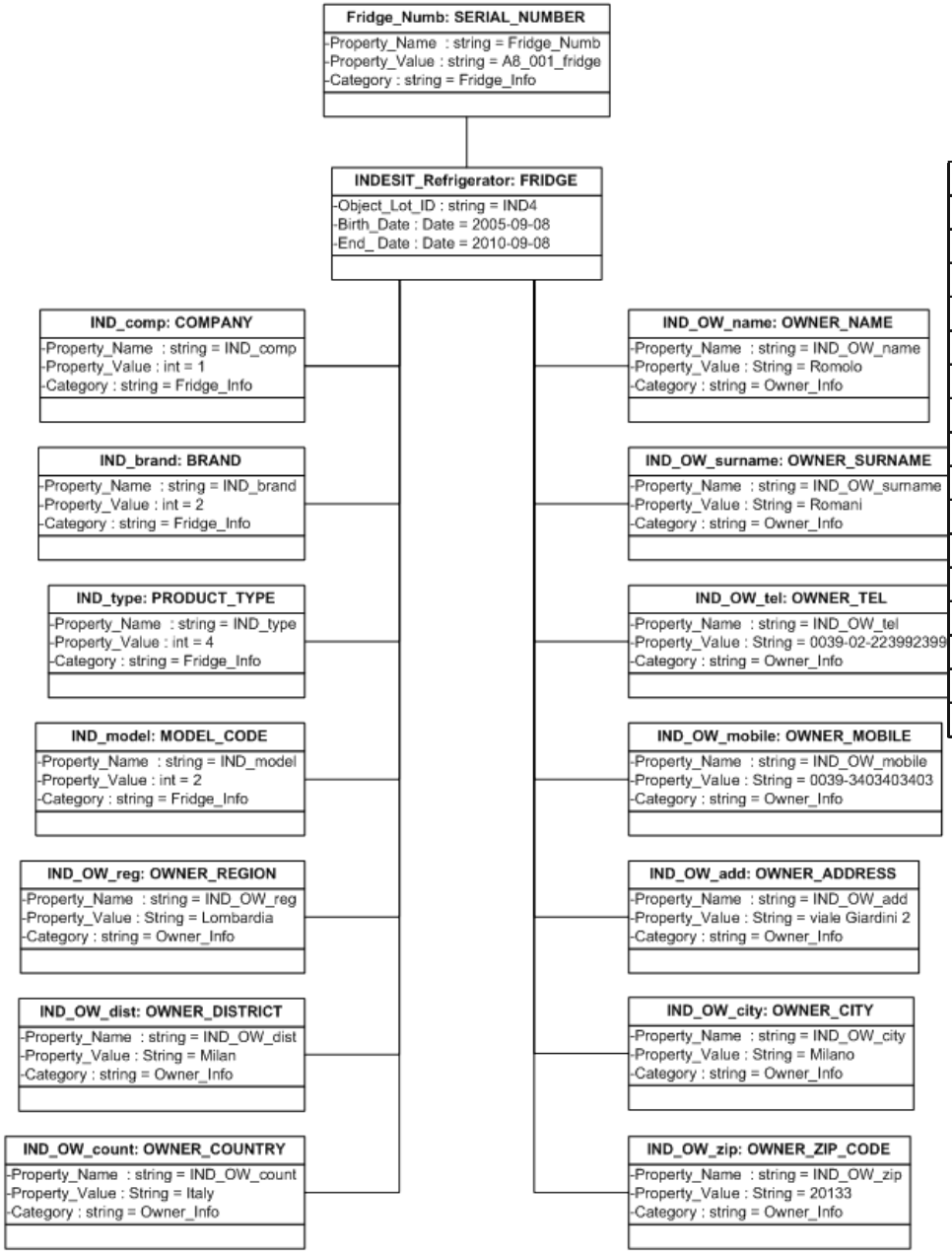

UDEF Object	UDEF Property	UDEF ID
Refrigerator Assembly Product	Serial Identifier	b.o.9_31.8
Refrigerator Assembly Product	Lot Identifier	b.o.9_34.8
Refrigerator Manufacturer Enterprise	Company Name	a.ah.3_4.10
Refrigerator Assembly Product	Brand Name	b.o.9_3.10
Refrigerator Assembly Product	Type Code	b.o.9_33.4
Refrigerator Assembly Product	Model Type Code	b.o.9_16.33.4
Refrigerator Owner Person	Given Name	a.ab.5_12.10
Refrigerator Owner Person	Family Name	a.ab.5_11.10
Refrigerator Owner Person	Home Telephone Identifier	a.ab.5_5.37.8
Refrigerator Owner Person	Mobile Telephone Identifier	a.ab.5_3.37.8
Refrigerator Owner Person	Street Address Text	a.ab.5_6.12.14
Refrigerator Owner Person	Address City Name	a.ab.5_1.10.10
Refrigerator Owner Person	Address Region Name	a.ab.5_1.37.10
Refrigerator Owner Person	Address State Name	a.ab.5_1.36.10
Refrigerator Owner Person	Address Country Code	a.ab.5_3.36.4
Refrigerator Owner Person	Address Postal Zone Code	a.ab.5_1.1.10.4

QLM Refrigerator Sensor Measurement Concepts

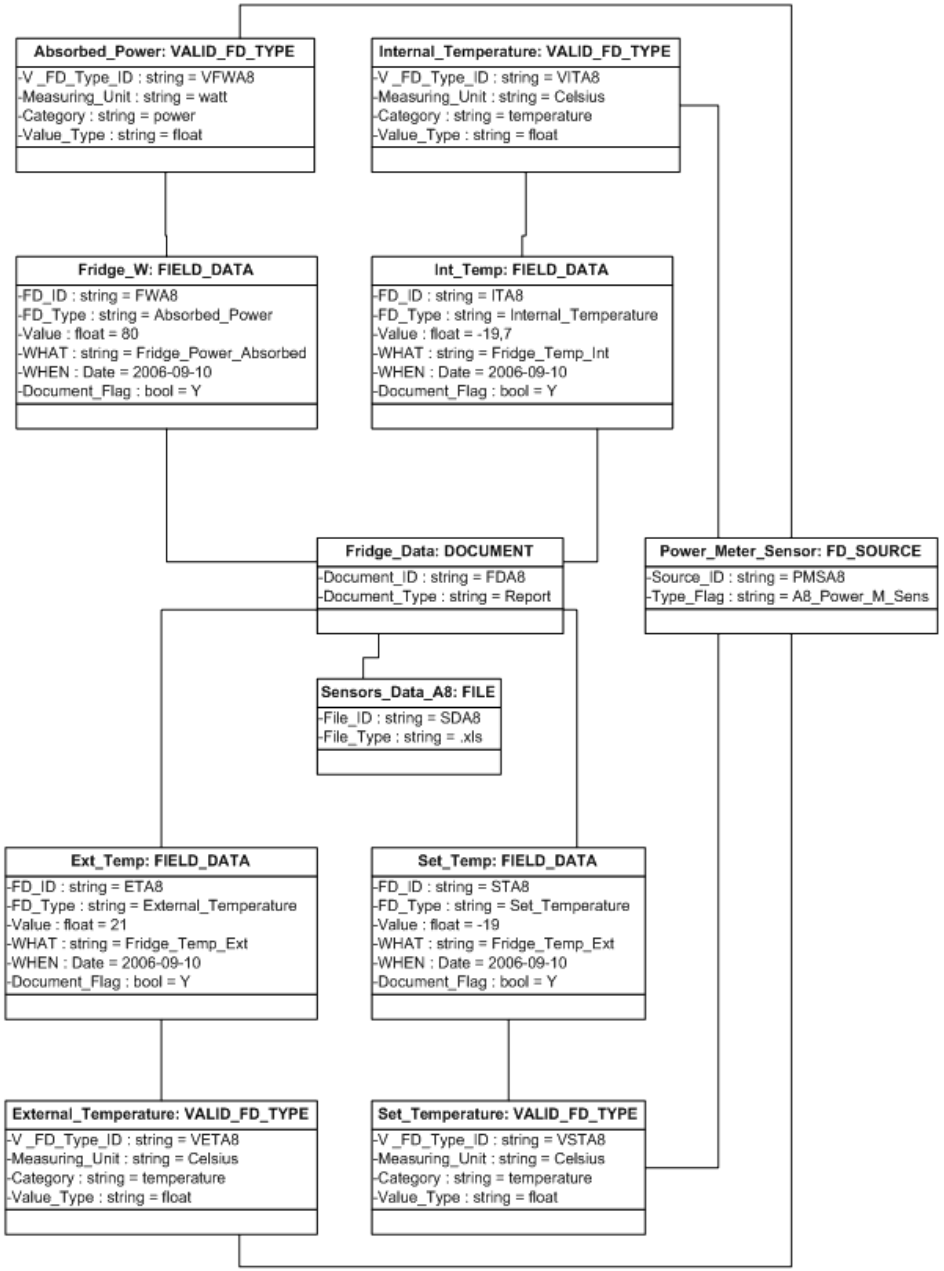

QLM to UDEF Mappings - continued

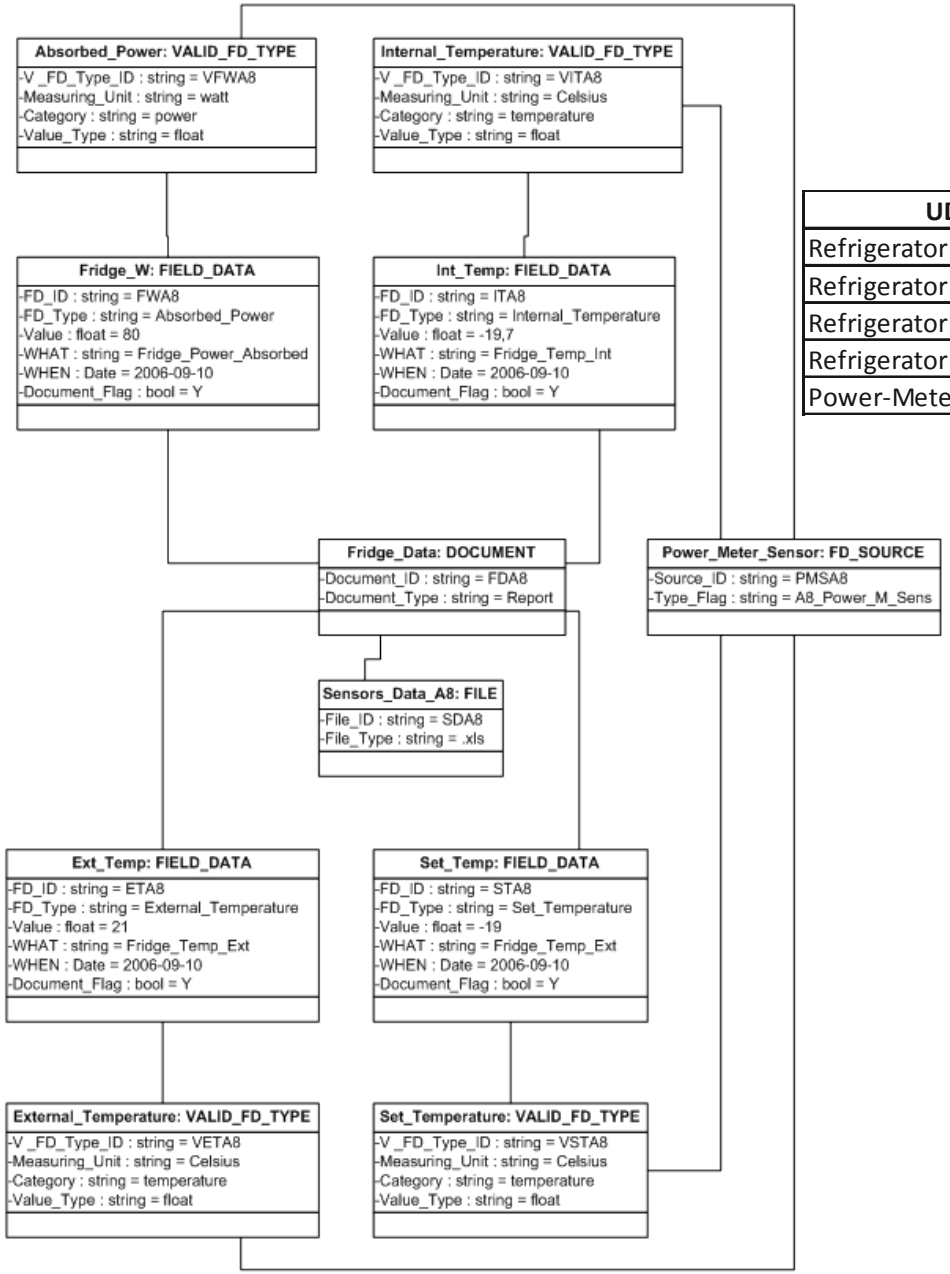

UDEF Object	UDEF Property	UDEF ID
Refrigerator Assembly Product	Consumed Electrical Power Measure	b.o.9_1.1.14.13
Refrigerator Assembly Product	Internal Temperature Measure	b.o.9_4.3.13
Refrigerator Assembly Product	External Temperature Measure	b.o.9_5.3.13
Refrigerator Assembly Product	Set Temperature Measure	b.o.9_6.3.13
Power-Meter Sensor Product	Serial Identifier	a.ao.9_31.8

QLM to UDEF Mappings – XML Files – 2 Systems

Refrig1 System


```xml
<?xml version="1.0" encoding="UTF-8" ?>
<Refrig>
 <Resistor>
  <LotID GUID="a.f.g.9_34.8">1234</LotID>
  <BirthDate GUID="a.f.g.9_15.6">2009-04-15</BirthDate>
  <EndDate GUID="a.f.g.9_2.56.6">2019-04-15</EndDate>
 </Resistor>
 <Thermocouple>
  <LotID GUID="b.f.g.9_34.8">XY12B</LotID>
  <BirthDate GUID="b.f.g.9_15.6">2009-04-10</BirthDate>
  <EndDate GUID="b.f.g.9_2.56.6">2012-04-10</EndDate>
 </Thermocouple>
 <Fan>
  <LotID GUID="d.f.g.9_34.8">45A18</LotID>
  <BirthDate GUID="d.f.g.9_15.6">2009-04-20</BirthDate>
  <EndDate GUID="d.f.g.9_2.56.6">2014-04-20</EndDate>
 </Fan>
</Refrig>
```


Refrig2 System


```xml
<?xml version="1.0" encoding="UTF-8" ?>
<Refrig>
 <Resistor>
  <LotNum GUID="a.f.g.9_34.8">1234</LotNum>
  <MfgDate GUID="a.f.g.9_15.6">2009-04-15</MfgDate>
  <ShelfDate GUID="a.f.g.9_2.56.6">2019-04-15</ShelfDate>
 </Resistor>
 <Thermocouple>
  <LotNum GUID="b.f.g.9_34.8">XY12B</LotNum>
  <MfgDate GUID="b.f.g.9_15.6">2009-04-10</MfgDate>
  <ShelfDate GUID="b.f.g.9_2.56.6">2012-04-10</ShelfDate>
 </Thermocouple>
 <Fan>
  <LotNum GUID="d.f.g.9_34.8">45A18</LotNum>
  <MfgDate GUID="d.f.g.9_15.6">2009-04-20</MfgDate>
  <ShelfDate GUID="d.f.g.9_2.56.6">2014-04-20</ShelfDate>
 </Fan>
</Refrig>
```

QLM to UDEF Mappings – XML Files – 2 Languages

English System


```xml
<?xml version="1.0" encoding="UTF-8" ?>
<Refrig>
 <Resistor>
  <LotID GUID="a.f.g.9_34.8">1234</LotID>
  <BirthDate GUID="a.f.g.9_15.6">2009-04-15</BirthDate>
  <EndDate GUID="a.f.g.9_2.56.6">2019-04-15</EndDate>
 </Resistor>
 <Thermocouple>
  <LotID GUID="b.f.g.9_34.8">XY12B</LotID>
  <BirthDate GUID="b.f.g.9_15.6">2009-04-10</BirthDate>
  <EndDate GUID="b.f.g.9_2.56.6">2012-04-10</EndDate>
 </Thermocouple>
 <Fan>
  <LotID GUID="d.f.g.9_34.8">45A18</LotID>
  <BirthDate GUID="d.f.g.9_15.6">2009-04-20</BirthDate>
  <EndDate GUID="d.f.g.9_2.56.6">2014-04-20</EndDate>
 </Fan>
</Refrig>
```


Italian System


```xml
<?xml version="1.0" encoding="UTF-8" ?>
<Frigo>
 <Resistenza>
  <Lotto GUID="a.f.g.9_34.8">1234</Lotto>
  <Nato GUID="a.f.g.9_15.6">2009-04-15</Nato>
  <Morto GUID="a.f.g.9_2.56.6">2019-04-15</Morto>
 </Resistenza>
 <Termocoppia>
  <Lotto GUID="b.f.g.9_34.8">XY12B</Lotto>
  <Nato GUID="b.f.g.9_15.6">2009-04-10</Nato>
  <Morto GUID="b.f.g.9_2.56.6">2012-04-10</Morto>
 </Termocoppia>
 <Ventola>
  <Lotto GUID="d.f.g.9_34.8">45A18</Lotto>
  <Nato GUID="d.f.g.9_15.6">2009-04-20</Nato>
  <Morto GUID="d.f.g.9_2.56.6">2014-04-20</Morto>
 </Ventola>
</Frigo>
```

QLM to UDEF Mappings – XML Files – 2 Languages

English System


```xml
<?xml version="1.0" encoding="UTF-8" ?>
<Refrig>
 <Resistor>
  <LotID GUID="a.f.g.9_34.8">1234</LotID>
  <BirthDate GUID="a.f.g.9_15.6">2009-04-15</BirthDate>
  <EndDate GUID="a.f.g.9_2.56.6">2019-04-15</EndDate>
 </Resistor>
 <Thermocouple>
  <LotID GUID="b.f.g.9_34.8">XY12B</LotID>
  <BirthDate GUID="b.f.g.9_15.6">2009-04-10</BirthDate>
  <EndDate GUID="b.f.g.9_2.56.6">2012-04-10</EndDate>
 </Thermocouple>
 <Fan>
  <LotID GUID="d.f.g.9_34.8">45A18</LotID>
  <BirthDate GUID="d.f.g.9_15.6">2009-04-20</BirthDate>
  <EndDate GUID="d.f.g.9_2.56.6">2014-04-20</EndDate>
 </Fan>
</Refrig>
```


Finnish System


```xml
<?xml version="1.0" encoding="UTF-8" ?>
<Jääkaappi>
 <Vastus>
  <SarjaNumero GUID="a.f.g.9_34.8">1234</SarjaNumero>
  <SyntymäPvm GUID="a.f.g.9_15.6">2009-04-15</SyntymäPvm>
  <LoppuPvm GUID="a.f.g.9_2.56.6">2019-04-15</LoppuPvm>
 </Vastus>
 <Termopari>
  <SarjaNumero GUID="b.f.g.9_34.8">XY12B</SarjaNumero>
  <SyntymäPvm GUID="b.f.g.9_15.6">2009-04-10</SyntymäPvm>
  <LoppuPvm GUID="b.f.g.9_2.56.6">2012-04-10</LoppuPvm>
 </Termopari>
 <Tuuletin>
  <SarjaNumero GUID="d.f.g.9_34.8">45A18</SarjaNumero>
  <SyntymäPvm GUID="d.f.g.9_15.6">2009-04-20</SyntymäPvm>
  <LoppuPvm GUID="d.f.g.9_2.56.6">2014-04-20</LoppuPvm>
 </Tuuletin>
</Jääkaappi>
```

Gap Analysis Tools Demo

Example Open Group Gap Analysis Reports

https://jserver.opengroup.org/UDEF/UdefReport1

Systems Comparison

UDEF GUID	Refrig1.txt	Refrig2.txt
a.f.g.9_15.6	{}BirthDate	{}MfgDate
a.f.g.9_2.56.6	{}EndDate	{}ShelfDate
a.f.g.9_34.8	{}LotID	{}LotNum
b.f.g.9_15.6	{}BirthDate	{}MfgDate
b.f.g. 9_2.56.6	{}EndDate	{}ShelfDate
b.f.g.9_34.8	{}LotID	{}LotNum
d.f.g.9_15.6	{}BirthDate	{}MfgDate
d.f.g. 9_2.56.6	{}EndDate	{}ShelfDate
d.f.g.9_34.8	{}LotID	{}LotNum

Languages Comparison

UDEF GUID	Refrig1-IT.txt	Refrig1-FI.txt
a.f.g.9_15.6	{}Nato	{}SyntymäPvm
a.f.g.9_2.56.6	{}Morto	{}LoppuPvm
a.f.g.9_34.8	{}Lotto	{}SarjaNumero
b.f.g.9_15.6	{}Nato	{}SyntymäPvm
b.f.g.9_2.56.6	{}Morto	{}LoppuPvm
b.f.g.9_34.8	{}Lotto	{}SarjaNumero
d.f.g.9_15.6	{}Nato	{}SyntymäPvm
d.f.g.9_2.56.6	{}Morto	{}LoppuPvm
d.f.g.9_34.8	{}Lotto	{}SarjaNumero

Example Enhanced Gap Analysis Reports

UDEF-IT, LLC
Enabling
Global Interoperability

http://www.udef-it.com/

Systems Comparison

Gap Analysis

Gap Analysis

A	B	C	D
UDEF ID	UDEF Definition	File1 Element	File2 Element
a.f.g.9_34.8	Resistor.Component.Part.Product_Lot.Identifier	LotID	LotNum
a.f.g.9_15.6	Resistor.Component.Part.Product_Manufacture.Date	BirthDate	MfgDate
a.f.g.9_2.56.6	Resistor.Component.Part.Product_Usage.End.Date	EndDate	ShelfDate
b.f.g.9_34.8	Thermocouple.Component.Part.Product_Lot.Identifier	LotID	LotNum
b.f.g.9_15.6	Thermocouple.Component.Part.Product_Manufacture.Date	BirthDate	MfgDate
b.f.g.9_2.56.6	Thermocouple.Component.Part.Product_Usage.End.Date	EndDate	ShelfDate
d.f.g.9_34.8	Fan.Component.Part.Product_Lot.Identifier	LotID	LotNum
d.f.g.9_15.6	Fan.Component.Part.Product_Manufacture.Date	BirthDate	MfgDate
d.f.g.9_2.56.6	Fan.Component.Part.Product_Usage.End.Date	EndDate	ShelfDate

Languages Comparison

Gap Analysis

Gap Analysis

A	B	C	D
UDEF ID	UDEF Definition	File1 Element	File2 Element
a.f.g.9_34.8	Resistor.Component.Part.Product_Lot.Identifier	SarjaNumero	Lotto
a.f.g.9_15.6	Resistor.Component.Part.Product_Manufacture.Date	SyntymaPvm	Nato
a.f.g.9_2.56.6	Resistor.Component.Part.Product_Usage.End.Date	LoppuPvm	Morto
b.f.g.9_34.8	Thermocouple.Component.Part.Product_Lot.Identifier	SarjaNumero	Lotto
b.f.g.9_15.6	Thermocouple.Component.Part.Product_Manufacture.Date	SyntymaPvm	Nato
b.f.g.9_2.56.6	Thermocouple.Component.Part.Product_Usage.End.Date	LoppuPvm	Morto
d.f.g.9_34.8	Fan.Component.Part.Product_Lot.Identifier	SarjaNumero	Lotto
d.f.g.9_15.6	Fan.Component.Part.Product_Manufacture.Date	SyntymaPvm	Nato
d.f.g.9_2.56.6	Fan.Component.Part.Product_Usage.End.Date	LoppuPvm	Morto

Contact Information

UDEF-IT, LLC

UDEF Training & Consulting Services

UDEF-IT, LLC
Enabling
Global Interoperability

Ron Schuldt, Senior Partner
New Smyrna Beach, Florida

phone (386) 314-4933
ron.schuldt@udef-it.com
http://www.udef-it.com